## Mechanical Specification

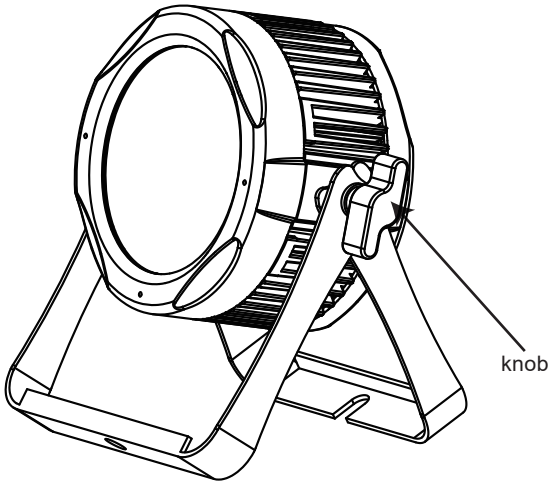


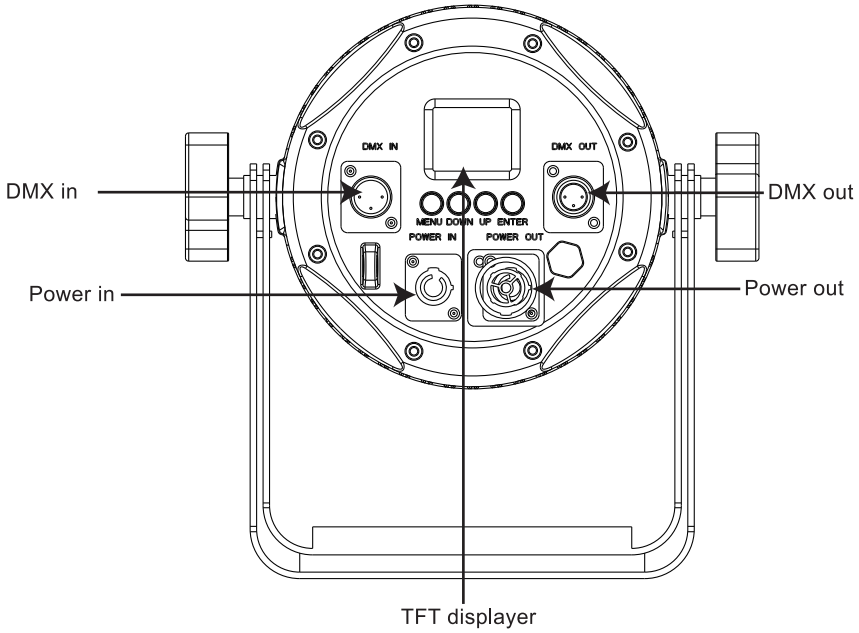




# User manual

# AH035C

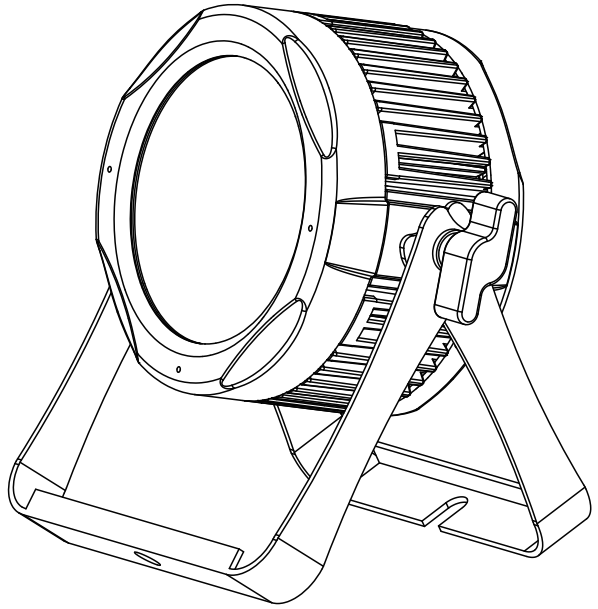

Please read carefully before use

***Packaging:***Thanks for your purchasing the AH035C. All the lights have been checked and are in excellent operating condition. Please check the shipping carton first,because there may be damage occurred during the shipment.Then check the lights carefully and be sure that the lights is intact and works normally.In the event damage has been found, spare parts are missing or the lights works abnormally,please contact us for further instructions. And please don't return the lights to the dealer before contacting us.

***Introduction:***The AH035C has three operating modes:DMX mode, Auto mode and Master/Slave mode.And the lights has five DMX modes,including channel 3,channel 6, channel 8 and channel 12.There are twenty-one built-in Auto programs and you can see twenty-one kinds of shows when you open the Auto mode.Meanwhile, you can edit your desired Auto program in "EDIT"menu.In addition, you can connect several pieces of lights in DMX mode and set one in Auto mode, and the others in Master/Slave mode.And then all the lights in Master/Slave mode will run following the one in Auto mode.Using fog or special effect smoke,you can see better showing effect.

***Warning!***

1.Don't expose the lights to rain or moisture,for the sake of preventing the risk of electrical shock or fire.

2.Don't look directly at the opening lights all the time,or it may damage your eyes.



## Product Overview

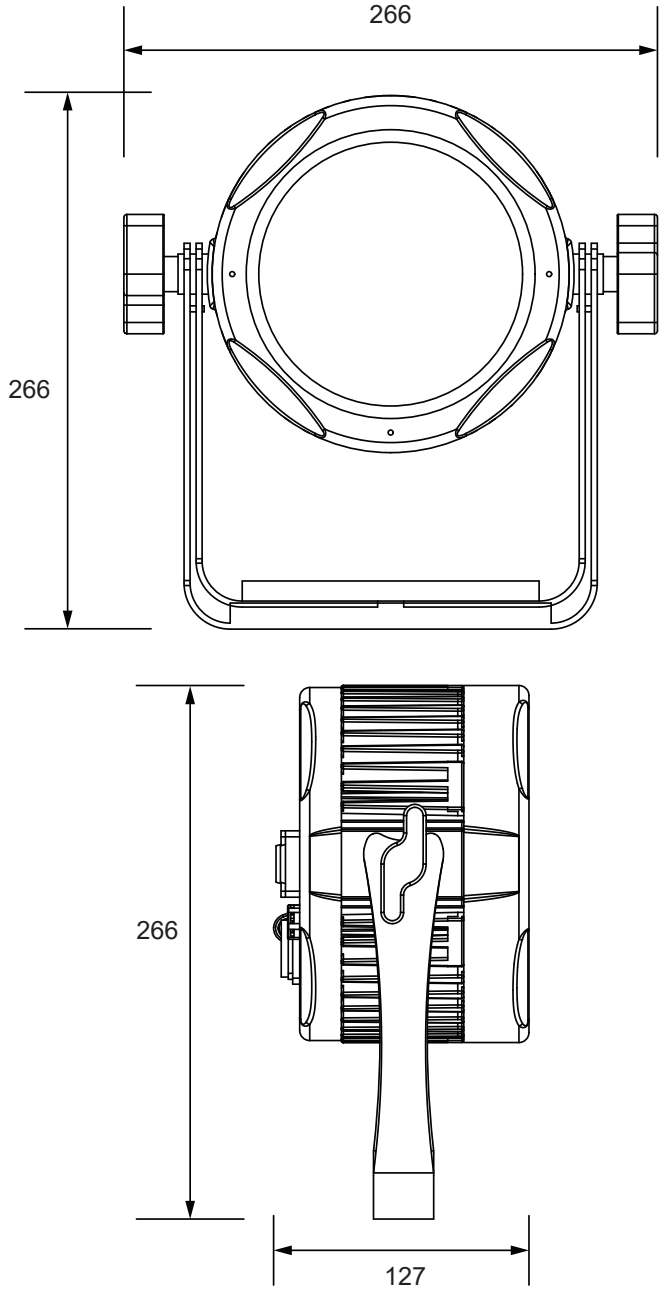

## CABLE CONNECTORS

Cabling must have a male XLR connector on one end and a female XLR connector on the other end.

**DMX connector configuration**

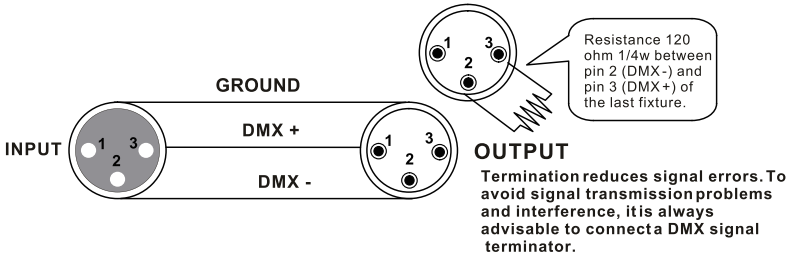


caution:Do not allow contact between the ground and the fixture's chassis ground. Grounding the ground can cause a ground loop, and your fixture may perform erratically. Test cables with an ohm meter to verify positive pole and to make sure the pins are not grounded or shorted to the shield or each other.

### *3-PIN TO 5-PIN CONVERSION CHART*

Note! If you use a controller with a 5 pin DMX output connector, you need to use a 5 pin to 3 pin adapter. The chart below details a proper cable conversion:

*3-PIN TO 5-PIN CONVERSION CHART*

| Conductor | 3 Pin Female (output) | 5 Pin Male (Input) |
|---|---|---|
| Ground/Shield | Pin 1 | Pin 1 |
| Data ( - ) signal | Pin 2 | Pin 2 |
| Data ( + ) signal | Pin 3 | Pin 3 |
| Do not use | | Do not use |
| Do not use | | Do not use |



## Features

OPTICS
- Light Source: 7*15W, 6 in 1 RGBWAV LEDs
- Lens: 15°

ELECTRICAL
- Power consumption: 105W
- Power linkable: 16pcs @230V;8pcs @110V
- Voltage: 100V - 240V, 50/60Hz

CONTROL
- DMX channels: 3, 6, 8 & 12CH
- Run Mode: DMX 512 /Master Slave/Auto Run
- Built-in Effect: color mixing, variable color chasing, strobing and fading.
- Maximum 66 ID setng for easy separately control

SOFTWARE
- 10 internal programs and 10 customerize programs
- 4 different dimming curve
- 11 kinds of color temperature white
- Smart temperature control
- Working time record

PHYSICAL
- Material: Aluminum body
- TFT displayer with four buttons
- Key lock for buttons
- IP65
- Temperature: -30℃~45℃
- N.W: 3.4 KG
- G.W: 4.3 KG
- Dimensions: 266 x 127 x 266 mm

## Displayer introduction

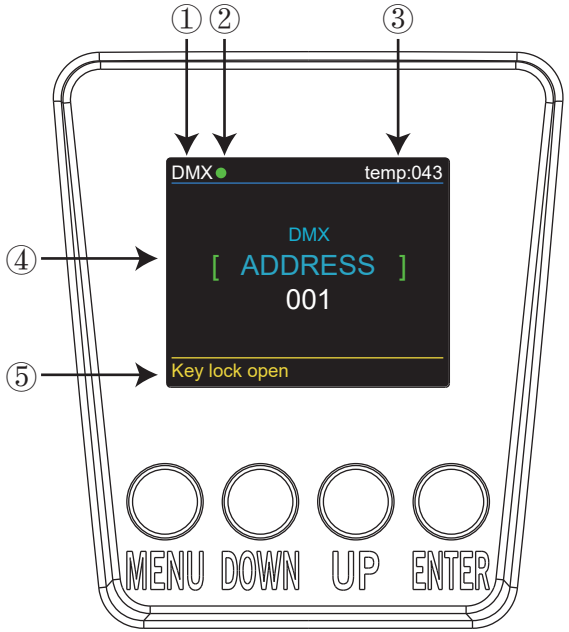


1. DMX means the light is in the DMX mode.Similarly,SLAVE means the light is in the SLAVE mode.

2. The color of the point shows the condition of signal transmission. Green represents the good condition, while red represents the signal is interrupted.

3. The item shows the working temperature of the light.When the working temperature exceeds the max temperature,the color of the letters and number will change from white to yellow.

4. This item shows the menu you selected.

5. This item shows the condition of key lock. “Key lock open” means the key lock is open.And “Key lock off” means the key lock is close.



## DMX-512 addressing with ID address

1. Follow instructions 1 for DMX 512 addressing.

2. Activate ID addressing in each fixture by setting panel function “ID ON/OFF” to ON. “Settings” to “ID ON/OFF” to “ON” For every DMX 512 starting address the user can set 66 separate ID addresses. Set ID addresses in each fixture by setting panel function “ ID address” to incremental values.(I.e. 1, 12, 24, 36 etc...) “Settings” to “address” to “01~66”.

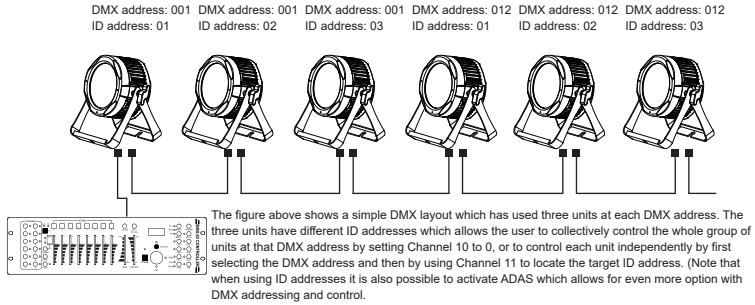


The figure above shows a simple DMX layout which has used three units at each DMX address. The three units have different ID addresses which allows the user to collectively control the whole group of units at that DMX address by setting Channel 10 to 0, or to control each unit independently by first selecting the DMX address and then by using Channel 11 to locate the target ID address. (Note that when using ID addresses it is also possible to activate ADAS which allows for even more option with DMX addressing and control.

## UPLOAD

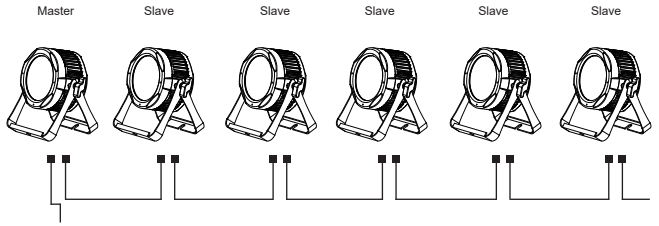


First,set one light, which involves the program you have edited in EDIT menu and want to upload, in Master mode,and others in Slave mode.

Then,connect all the lights with DMX cables.Finally,select the UPLOAD menu of the Master light and press ENTER.All the programs edited in the Master light will be uploaded to the Slave lights.

**Channel 12 (Id address set)**

| | | | | | | | |
|---|---|---|---|---|---|---|---|
| 0--9 | all Ids | 170--179 | Id17 | 223 | Id34 | 240 | Id51 |
| 10--19 | Id1 | 180--189 | Id18 | 224 | Id35 | 241 | Id52 |
| 20--29 | Id2 | 190--199 | Id19 | 225 | Id36 | 242 | Id53 |
| 30--39 | Id3 | 200--209 | Id20 | 226 | Id37 | 243 | Id54 |
| 40--49 | Id4 | 210 | Id21 | 227 | Id38 | 244 | Id55 |
| 50--59 | Id5 | 211 | Id22 | 228 | Id39 | 245 | Id56 |
| 60--69 | Id6 | 212 | Id23 | 229 | Id40 | 246 | Id57 |
| 70--79 | Id7 | 213 | Id24 | 230 | Id41 | 247 | Id58 |
| 80--89 | Id8 | 214 | Id25 | 231 | Id42 | 248 | Id59 |
| 90--99 | Id9 | 215 | Id26 | 232 | Id43 | 249 | Id60 |
| 100--109 | Id10 | 216 | Id27 | 233 | Id44 | 250 | Id61 |
| 110--119 | Id11 | 217 | Id28 | 234 | Id45 | 251 | Id62 |
| 120--129 | Id12 | 218 | Id29 | 235 | Id46 | 252 | Id63 |
| 130--139 | Id13 | 219 | Id30 | 236 | Id47 | 253 | Id64 |
| 140--149 | Id14 | 220 | Id31 | 237 | Id48 | 254 | Id65 |
| 150--159 | Id15 | 221 | Id32 | 238 | Id49 | 255 | Id66 |
| 160--169 | Id16 | 222 | Id33 | 239 | Id50 | | |



## Programme Menu

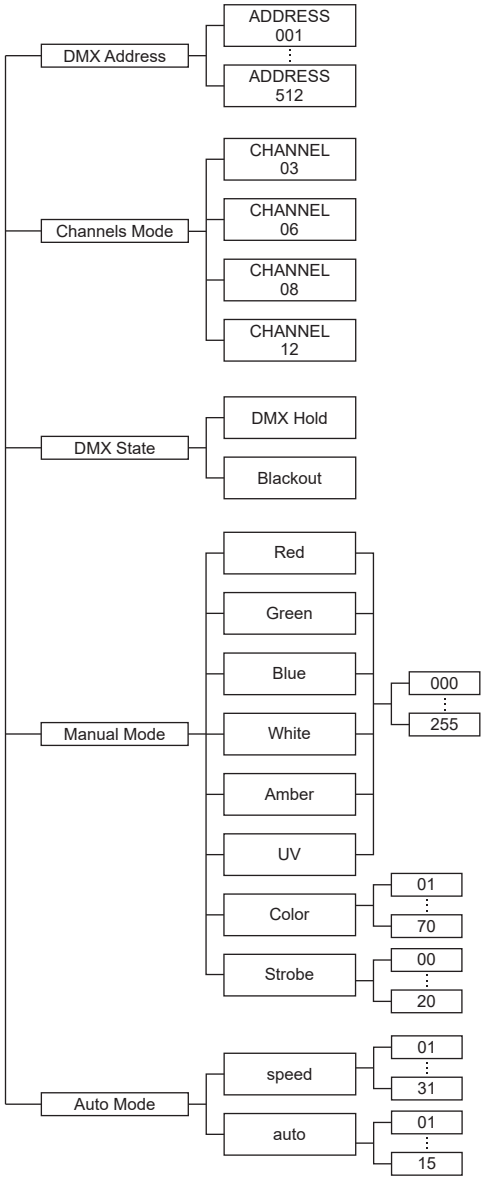

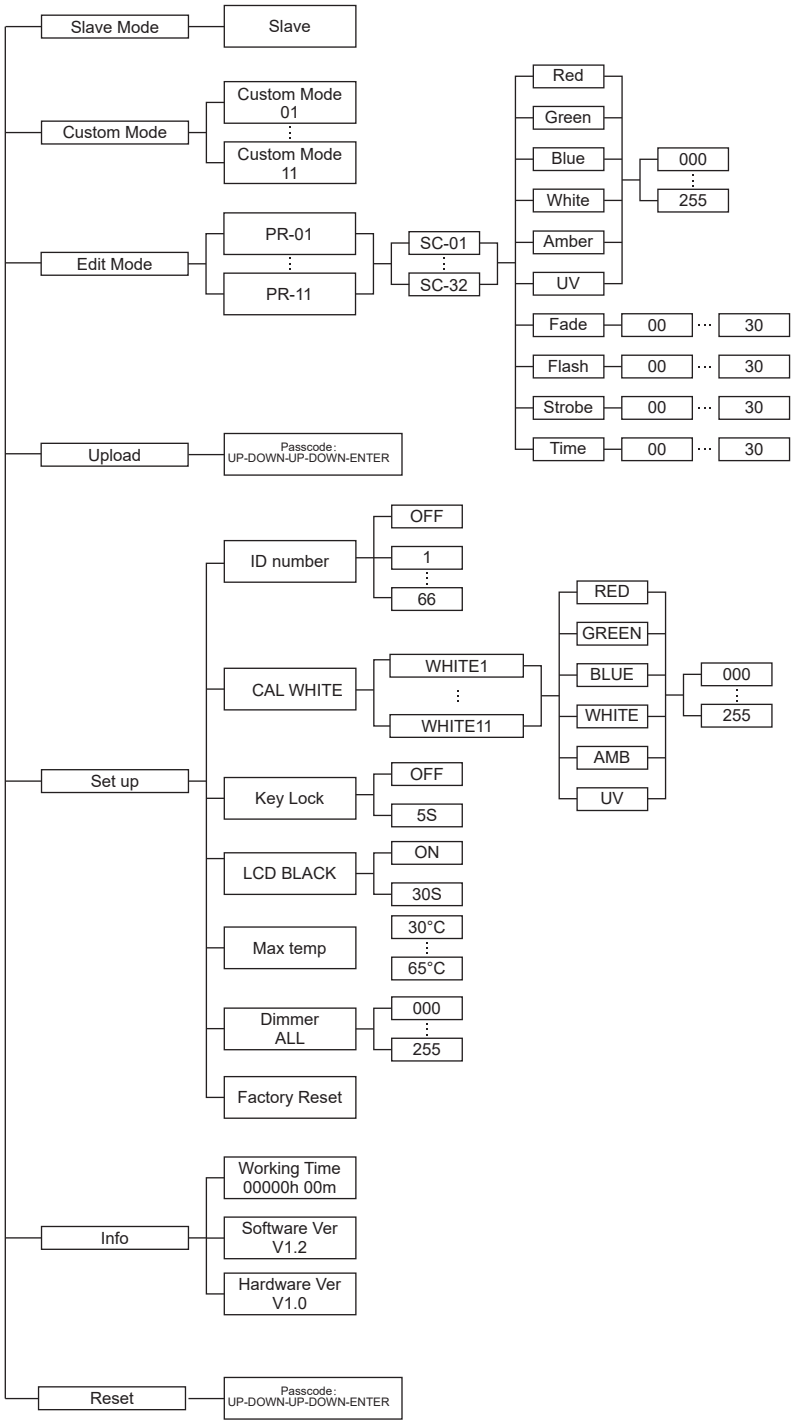




| | | |
|---|---|---|
| 9 | 156 - 159 | chocolate |
| | 160 - 163 | just blue |
| | 164 - 167 | surprise pink |
| | 168 - 171 | scarlet |
| | 172 - 175 | surprise peach |
| | 176 - 179 | fire |
| | 180 - 183 | english rose |
| | 184 - 187 | mauve |
| | 188 - 191 | bright blue |
| | 192 - 195 | alice blue |
| | 196 - 199 | rose indigo |
| | 200 - 203 | urban blue |
| | 204 - 207 | cool blue |
| | 208 - 211 | Light salmon |
| | 212 - 215 | mayan sun |
| | 216 - 219 | cherry rose |
| | 220 - 223 | flesh pink |
| | 224 - 255 | skelton exotic sangria |
| 10 | 0 - 7 | No funciton |
| | 8 - 17 | Auto 1 |
| | 18 - 27 | Auto 2 |
| | 28 - 37 | Auto 3 |
| | 38 - 47 | Auto 4 |
| | 48 - 57 | Auto 5 |
| | 58 - 67 | Auto 6 |
| | 68 - 77 | Auto 7 |
| | 78 - 87 | Auto 8 |
| | 88 - 97 | Auto 9 |
| | 98 - 107 | Auto 10 |
| | 108 - 117 | Custom1 |
| | 118 - 127 | Custom2 |
| | 128 - 137 | Custom3 |
| | 138 - 147 | Custom4 |
| | 148 - 157 | Custom5 |
| | 158 - 167 | Custom6 |
| | 168 - 177 | Custom7 |
| | 178 - 187 | Custom8 |
| | 188 - 197 | Custom9 |
| | 198 - 207 | Custom10 |
| | 208 - 255 | Custom11 |
| 11 | 0 - 255 | Speed when auto is enable |
| 12 | 0 - 255 | ID |

**DMX 12 channel**

| channel | value | function |
|---|---|---|
| 1 | 0 - 255 | 0 = Off 1 - 255 = Master dimmer |
| 2 | 0 - 255 | Strobe from slow to fast |
| 3 | 0 - 255 | Adjust red LEDs Dimmer from low to high |
| 4 | 0 - 255 | Adjust green LEDs Dimmer from low to high |
| 5 | 0 - 255 | Adjust blue LEDs Dimmer from low to high |
| 6 | 0 - 255 | Adjust white LEDs Dimmer from low to high |
| 7 | 0 - 255 | Adjust Amber LEDs Dimmer from low to high |
| 8 | 0 - 255 | Adjust UV LEDs Dimmer from low to high |
| 9 | 0 - 10 | none |
| | 11 - 12 | purplish red |
| | 13 - 16 | rose red |
| | 17 - 23 | red |
| | 24 - 27 | green |
| | 28 - 31 | blue |
| | 32 - 35 | yellow |
| | 36 - 39 | cyan |
| | 40 - 43 | magenta |
| | 44 - 47 | white |
| | 48 - 51 | orange |
| | 52 - 55 | pink |
| | 56 - 59 | violet |
| | 60 - 63 | aquamarine |
| | 64 - 67 | sky blue |
| | 68 - 71 | full white |
| | 72 - 75 | cool white |
| | 76 - 79 | warm white |
| | 80- 83 | white 3200 |
| | 84 - 87 | white 2500 |
| | 88 - 91 | yellow 2 |
| | 92 - 95 | straw |
| | 96 - 99 | orange 2 |
| | 100 - 103 | light rose |
| | 104 - 107 | dark pink |
| | 108 - 111 | magenta 2 |
| | 112 - 115 | blue 2 |
| | 116 - 119 | med blue green |
| | 120 - 123 | dark blue |
| | 124 - 127 | bright pink |
| | 128 - 131 | medium blue |
| | 132 - 135 | golden amber |
| | 136 - 139 | deep golden amber |
| | 140 - 143 | pale lavender |
| | 144 - 147 | apricot |
| | 148 - 151 | dark lavender |
| | 152 - 155 | lavender |



DMX-In this menu,you can connect several pieces of lights with DMX cable and control them with control console.
1. Press “ENTER” button and then UP or DOWN button until “DMX ” is showed.
2. Press “ENTER” button, and “CHANNEL” or “ADDRESS” will be showed.Then press ENTER.
1) “Channel [xx]” will be showed, “X” represents the showed DMX channel mode. You can press the UP or DOWN button to select your desired Channel mode.
2) “xxx” will be showed, “x” represents the showed address. You can press the UP or DOWN button to select your desired address.

RUN MODE-In this menu, you can select DMX mode or SLAVE mode.In SLAVE mode,you can select one light as the MASTER light and other lights in SLAVE mode will run following the MASTER light.
1. Press “ENTER” button and then UP or DOWN button until “RUN MODE” is showed.
2. Press “ENTER” button, and“DMX” or “SLAVE” will be showed, then press ENTER to select your desired mode.

SET UP-In this menu, you can adjust the value of the function.
1. Press “ENTER” button and then UP or DOWN button until “SET UP” is showed.
2. Press “ENTER” button, and there will be nine options. Then,press ENTER to select the option and press UP or DOWN button to select the value you desire as below.
1) ID number - You can select an ID Number in this menu.Then, you can adjust the value of channel 13 to the corresponding scope and control the light individually with control console.
2) Display Led - In this item,you can select “ON” or “OFF”.If you select ON,the displayer will be on all the time.And if you select OFF,the displayer will extinguish about ten seconds later.
3) Key locks - You can select whether the password is on or off in this menu , and the password is [ DOWN ] + [ UP ] + [ DOWN ] + [ UP ] .If you select “on”,then you have to input the password before pressing the buttons.Otherwise,the light won’t respond to your order.
4) Max temp - You can set the your desired Max working temperature about the light in this menu.When the working temperature of the light exceeds the Max temperature, the color of letter “Temp xx” showed in the menu will change from white to yellow.Meanwhile, the light will adjust the working temperature automatically.
5) Dimmer RED - You can adjust the red brightness in this menu.
6) Dimmer GREEN - You can adjust the green brightness in this menu.
7) Dimmer BLUE - You can adjust the blue brightness in this menu.
8) Dimmer WHITE - You can adjust the white brightness in this menu.
9) Dimmer AMB - You can adjust the amber brightness in this menu.
10) Dimmer UV - You can adjust the purple brightness in this menu.
11) Dimmer ALL - You can adjust the brightness of each color in this menu.

INFORMATION-In this menu, you can learn about the information of software, hardware and the working time of the light.
1. Press “ENTER” button and then UP or DOWN button until “INFORMATION” is showed.
2. Press “ENTER” button, and“Software” “Hardware” or “Fix times” will be showed. Then press ENTER, and you can see three items as below:
1) Software - This item displays the Software information.
2) Hardware - This item displays the Hardware information.
3) Fix times - This item displays the working hours about the light.

AUTO-In this menu, you can select your desire AUTO mode and adjust the running speed.
1. Press “ENTER” button and then UP or DOWN button until “AUTO” is showed.
2. Press “ENTER” button, and “SPEED” or “AUTO MODE” will be showed. Then press ENTER,and you can see two items as below:
1) SPEED - You can select your desired speed in this menu.
2) AUTO MODE - You can select your desired auto mode in this menu.

CUSTOMER-In this menu,you can select the AUTO program edited in the “EDIT” menu.
1. Press “ENTER” button and then UP or DOWN button until “CUSTOMER” is showed.
2. Press “ENTER” button, and there are 11 pre-programmed mode editted in the “EDIT”menu.

CAL WHITE-In this menu, you can adjust the value of 11 different white color.
1. Press “ENTER” button and then UP or DOWN button until “CAL WHITE” is showed.
2. Press “ENTER” button, and there are 11 pre-programmed White colors that can be edited by adjusting the value of “Red”, “Green”, “Blue”,“White”,“Amb” and “UV”

STAT COLOR-In this menu, you can adjust the value of static color and strobe speed as you like.
1. Press “ENTER” button and then UP or DOWN button until “STAT COLOR” is showed.
2. Press “ENTER” button, and there are eight options. Then press ENTER to select the option and press UP or DOWN button to select the value you desire as below:
1) STAT RED - You can adjust the red brightness in this menu.
2) STAT GREEN - You can adjust the green brightness in this menu.
3) STAT BLUE - You can adjust the blue brightness in this menu.
4) STAT WHITE - You can adjust the white brightness in this menu.
5) STAT AMB - You can adjust the amber brightness in this menu.
6) STAT UV - You can adjust the purple brightness in this menu.
7) SELET COLOR -You can select 70 static color in this menu.
8) STAT STROB - You can adjust the strobe speed in this menu.

EDIT-In this menu, you can edit your desired AUTO program.
1. Press “ENTER” button and then UP or DOWN button until “EDIT” is showed.
2. Press “ENTER” button, and open the “EDIT” mode to edit the custom programs from“PR.01” to “PR.11”.And there are 32 scenes that can be edited in each custom program.
3. You can edit a scene by adjusting the value of “RED (0~255)”, “GREEN (0~255)”, “BLUE (0~255)”, “WHITE (0~255)”, “AMBER (0~255)”, “PURPLE (0~255)”, “FADE (0~31)”, “FLASH(0~50)”, “STROBE (0~31)” & “TIME (0~100)” as you like. Then the data will be saved, when you press the ENTER button for 5 seconds.

UPLOAD-In this menu,you can connect several pieces of lights with MAX cables and set one light as the MASTER and others in SLAVE mode.Then upload the custom program in the MASTER light to the lights in SLAVE mode.
1. Press “ENTER” button and then UP or DOWN button until “UPLOAD” is showed.
2. Press “ENTER” button to upload the custom programs from the MASTER light to the SLAVE ones.

RESET-In this menu, you can reset all the value of the system.
1. Press “ENTER” button and then UP or DOWN button until “RESET” is showed.
2. Press the ENTER button to reset all the value of the system.



## DMX control mode

**DMX 3 channel**

| channel | value | function |
|---|---|---|
| 1 | 0 - 255 | Hue |
| 2 | 0 - 255 | Saturation |
| 3 | 0 - 255 | Value(brightness) |

**DMX 6 channel**

| channel | value | function |
|---|---|---|
| 1 | 0 - 255 | Adjust red LEDs Dimmer from low to high |
| 2 | 0 - 255 | Adjust green LEDs Dimmer from low to high |
| 3 | 0 - 255 | Adjust blue LEDs Dimmer from low to high |
| 4 | 0 - 255 | Adjust white LEDs Dimmer from low to high |
| 5 | 0 - 255 | Adjust Amber LEDs Dimmer from low to high |
| 6 | 0 - 255 | Adjust UV LEDs Dimmer from low to high |

**DMX 8 channel**

| channel | value | function |
|---|---|---|
| 1 | 0 - 255 | 0 = Off 1 - 255 = Master dimmer |
| 2 | 0 - 255 | Strobe from slow to fast |
| 3 | 0 - 255 | Adjust red LEDs Dimmer from low to high |
| 4 | 0 - 255 | Adjust green LEDs Dimmer from low to high |
| 5 | 0 - 255 | Adjust blue LEDs Dimmer from low to high |
| 6 | 0 - 255 | Adjust white LEDs Dimmer from low to high |
| 7 | 0 - 255 | Adjust Amber LEDs Dimmer from low to high |
| 8 | 0 - 255 | Adjust UV LEDs Dimmer from low to high |